JMT180KQ16V1C

Thyristor Module

Features

- A package consists of two inverse parallel SCR chips
- Welding by vacuum welding technology, which provide high reliability
- Insulated by silicone gel, provide a insulation voltage of 3000V~

Parameter	Value	Unit
V_{RRM}	1600	V
$I_{T(RMS)}$(@ T_C = 85℃)	180	A
I_{TSM}(@ t_P = 10ms)	2500	A
V_T(Max)	1.80	V

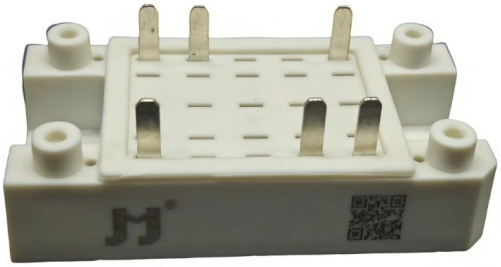

Applications

- Soft start
- Solid state relay
- AC/DC switch
- Temperature control

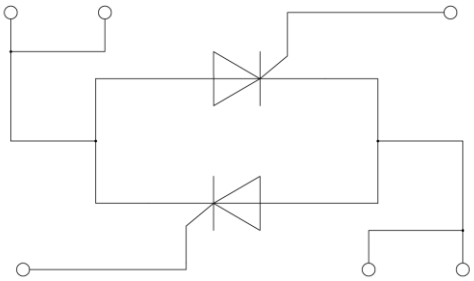

Absolute Maximum Ratings (@ T_C = 25°C unless otherwise specified)

Parameter	Conditions	Symbol	Values	Unit
Repetitive peak off-state voltage	Tvj = 25°C	V_{DRM}	1600	V
Repetitive peak reverse voltage	Tvj = 25°C	V_{RRM}	1600	V
Non-repetitive peak off-state voltage	Tvj = 25°C	V_{DSM}	1700	V
Non-repetitive peak reverse voltage	Tvj = 25°C	V_{RSM}	1700	V
RMS on-state current	T_C = 85°C	$I_{T(RMS)}$	180	A
Forward surge current	1/2 cycle, Sine wave, 50Hz Tvj = 25℃	I_{TSM}	2500	A
I^2t value for fusing		I^2t	31250	A^2s
Critical rate of rise of on-state current	I_G=2×I_{GT}	di/dt	150	A/μs
RMS isolation voltage	A.C 50Hz(1s/1min)	V_{ISO}	3600/3000	V
Junction temperature range		T_J	-40 ~ +125	℃
Storage temperature range		T_{stg}	-40 ~ +125	℃

Jiangsu JieJie Microelectronics Co., Ltd.
All product information are copyrighted and subject to legal disclaimers

Electrical Characteristics (@ T_C = 25°C unless otherwise specified)

Parameter	Conditions	Symbol	Values			Unit
			Min.	Typ.	Max.	
Peak forward voltage	I_T=360A, t_P=380μs	V_T			1.80	V
Repetitive peak off-state current	V_D = V_{DRM},T_{vj} = 25℃	I_{DRM}			100	μA
	V_D = V_{DRM},T_{vj} = 125℃				40	mA
Reverse leakage current	V_R = V_{RRM},T_{vj} = 25℃	I_{RRM}			100	μA
	V_R = V_{RRM},T_{vj} = 125℃				40	mA
Threshold voltage	For power loss calculation only T_{vj} = 125℃,	V_{TO}			0.95	V
Dynamic resistance	T_{vj} = 125℃,	r_T			2.1	mΩ
Triggering gate current	V_D=12V R_L=30Ω	I_{GT}	20		120	mA
Holding current	I_T=1A	I_H			250	mA
Latching current	I_G=1.2 I_{GT}	I_L			300	mA
Critical rate of rise of voltage	V_D=2/3V_{DRM} Tvj=125℃ Gate Open	dv/dt	1000			V/μs
Triggering gate voltage	V_D=12V R_L=30Ω	V_{GT}			1.8	V
Non triggering gate voltage	V_D=V_{DRM} Tvj=125℃	V_{GD}	0.25			V

Thermal Characteristics (@ T_C = 25°C unless otherwise specified)

Parameter	Conditions	Symbol	Values			Unit
			Min.	Typ.	Max.	
Thermal resistance, junction to case	per Thyristor	$R_{th(j-c)}$		0.33		℃/W
Mounting torque	Module torque to heatsink	M	1.7		2.3	N·m

Jiangsu JieJie Microelectronics Co., Ltd.
All product information are copyrighted and subject to legal disclaimers

Ordering Information

Device	Marking	Package	Weight	Inner Box	Per Carton
JMT180KQ16V1C	JMT180KQ16V1C	V1	42.9g/PCS	60 PCS	360 PCS

Typical Electrical & Thermal Characteristics

FIG.1: Forward characteristics(per thyristor)

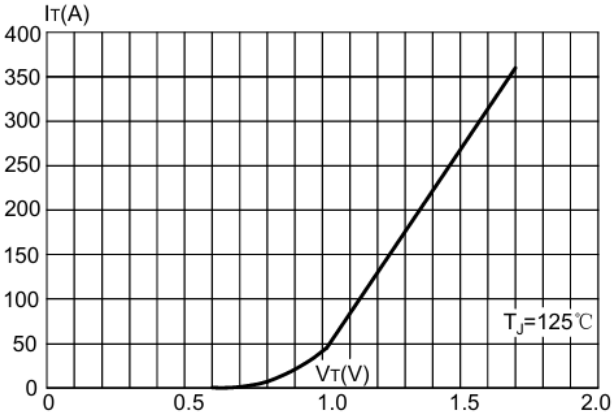

FIG.2: Surge overload current vs. time

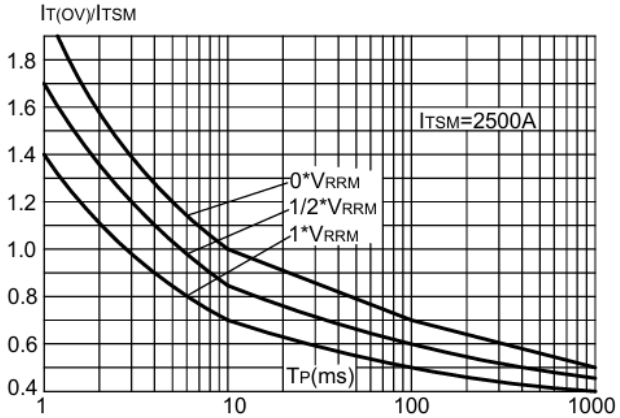

FIG.3: Power dissipation per module vs. R.M.S. current

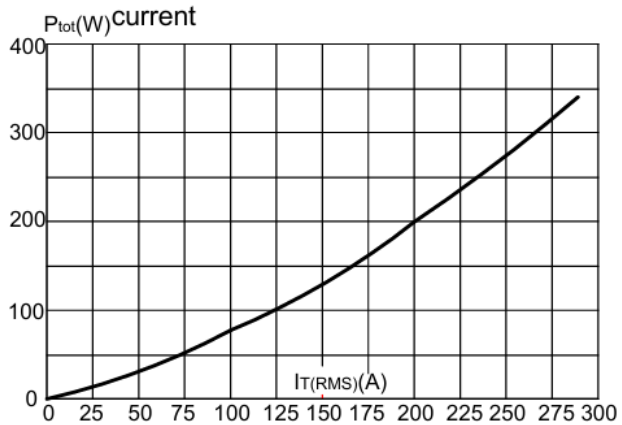

FIG.4: Maximum transient thermal impedance Junction-to-case(per thyristor)

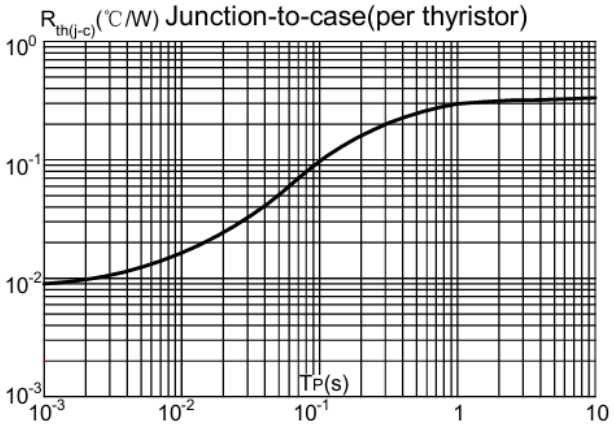

All product information are copyrighted and subject to legal disclaimers

Circuit Diagram

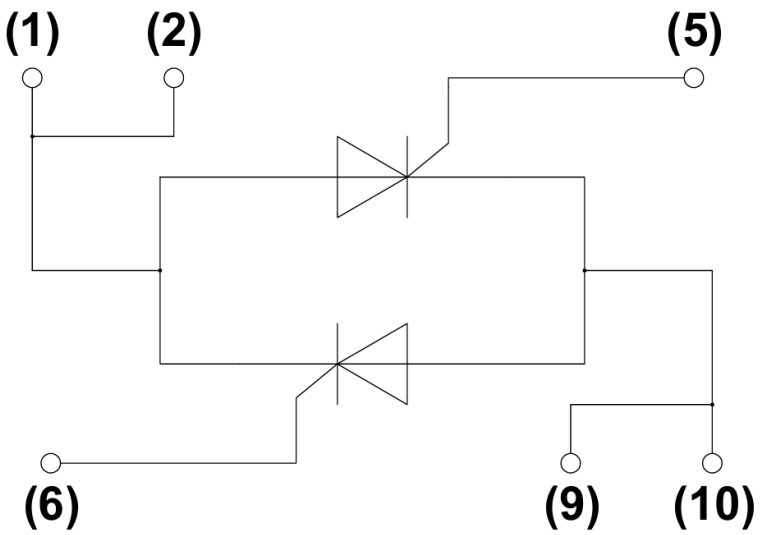

Package Outlines (mm)

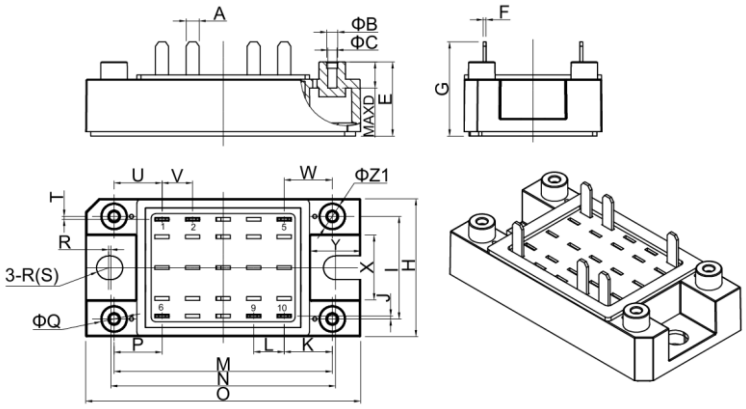

Unit of measurement: mm

Ref	Dimensions					
	Millimeters			Inches		
	Min	Typ	Max	Min	Typ	Max
A	2.85	3	3.15	0.112	0.118	0.124
B	2.3	2.5	2.7	0.091	0.098	0.106
C	1.9	2.1	2.3	0.075	0.083	0.091
D			6			0.236
E	16.25	17	17.75	0.640	0.669	0.699
F	0.55	0.65	0.75	0.022	0.026	0.030
G	20.85	21.6	22.35	0.821	0.850	0.880
H	30.85	31.6	32.35	1.215	1.244	1.274
I	23	23.5	24	0.906	0.925	0.945
J	0.17	0.67	1.17	0.007	0.026	0.046
K	10.5	11	11.5	0.413	0.433	0.453
L	6.5	7	7.5	0.256	0.276	0.295
M	49.5	50	50.5	1.949	1.969	1.988
N	51	51.5	52	2.008	2.028	2.047
O	62.25	63	63.75	2.451	2.480	2.510
P	10.25	11	11.75	0.404	0.433	0.463
Q	5.6	6.1	6.6	0.220	0.240	0.260
R	0.3	0.5	0.7	0.012	0.020	0.028
S	2.55	2.75	2.95	0.100	0.108	0.116
T	0.17	0.67	1.17	0.007	0.026	0.046
U	10.5	11	11.5	0.413	0.433	0.453
V	6.5	7	7.5	0.256	0.276	0.295
W	10.5	11	11.5	0.413	0.433	0.453
X	13.9	14.9	15.9	0.547	0.587	0.626
Y	10.3	11.3	12.3	0.406	0.445	0.484

All product information are copyrighted and subject to legal disclaimers

Information furnished in this document is believed to be accurate and reliable. However, Jiangsu JieJie Semiconductor Co., Ltd assumes no responsibility for the consequences of use without consideration for such information nor use beyond it. This information in this document is subject to change without prior notice. Notwithstanding this, Jiangsu JieJie will fully comply with the terms outlined in a signed agreement. Products and information provided in this document have no infringement of patents. Jiangsu JieJie assumes no responsibility for any infringement of other rights of third parties which may result from the use of such products and information. This document is the initial release, dated 6 March 2026. This document supersedes and replaces all information previously supplied.

is registered trademark of Jiangsu JieJie Semiconductor Co., Lt ©2026 Jiangsu JieJie Semiconductor Co., Ltd. All rights reserved.