JST41T-1600BW 40A TRIAC

Rev.A.1.0

DESCRIPTION:

The JST41T-1600BW triac is suitable for general purpose AC switching. It can be used as an ON/OFF function in applications such as heating regulation, induction motor starting circuits, for phase control operation in light dimmers, motor speed controllers. JST41T-1600BW snubberless triac is especially recommended for use on inductive loads. By using a DBC, JST41T-1600BW provides a rated insulation voltage of 2500 VRMS, complying with UL standards (File ref: E252906). Package TG-C is RoHS compliant.

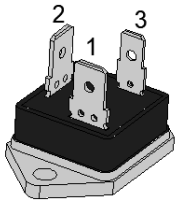

TG-C

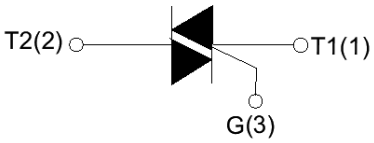

MAIN FEATURES

Symbol	Value	Unit
$I_{T(RMS)}$	40	A
V_{DRM} /V_{RRM}	1600	V
$I_{GT\ I/II/III}$	50/50/50	mA

ABSOLUTE MAXIMUM RATINGS

Parameter	Symbol	Value	Unit
Storage junction temperature range	T_{stg}	-40-150	℃
Operating junction temperature range	T_j	-40-125	℃
Repetitive peak off-state voltage (T_j=25℃)	V_{DRM}	1600	V
Repetitive peak reverse voltage (T_j=25℃)	V_{RRM}	1600	V
RMS on-state current (T_C≤80℃)	$I_{T(RMS)}$	40	A
Non repetitive surge peak on-state current (full cycle , t_p=20ms , T_j=25℃)	I_{TSM}	400	A
Non repetitive surge peak on-state current (full cycle , t_p=16.6ms , T_j=25℃)		440	
I^2t value for fusing (t_p=10ms , T_j=25℃)	I^2t	800	A^2s
Critical rate of rise of on-state current (I_G=2×I_{GT} , f=100Hz , T_j=125℃)	dI/dt	100	A/μs
Peak gate current (t_p=20μs , T_j=125℃)	I_{GM}	8	A
Average gate power dissipation (T_j=125℃)	$P_{G(AV)}$	0.5	W

Peak gate power	P_{GM}	40	W
Peak pulse voltage (T_j=25℃; non-repetitive,off-state;FIG.7)	V_{pp}	1.2	kV

ELECTRICAL CHARACTERISTICS(T_j=25℃ unless otherwise specified)

Symbol	Test Condition	Quadrant	Value		Unit
I_{GT}	V_D =12V R_L =33Ω	Ⅰ-Ⅱ-Ⅲ	MAX.	50	mA
V_{GT}		Ⅰ-Ⅱ-Ⅲ	MAX.	1.3	V
V_{GD}	V_D =V_{DRM} T_j=125℃ R_L =3.3kΩ	Ⅰ-Ⅱ-Ⅲ	MIN.	0.2	V
I_L	I_G=1.2I_{GT}	Ⅰ-Ⅲ	MAX.	80	mA
		Ⅱ		200	
I_H	I_T =500mA		MAX.	100	mA
dV/dt	V_D=1070V Gate Open T_j=125℃		MIN.	1500	V/μs
(dI/dt)c	(dV/dt)c=20V/μs T_j=125℃		MIN.	25	A/ms
t_{on}	I_G=80mA I_A=400mA I_R=40mA T_j=25℃		TYP.	10	μs
t_{off}				70	

STATIC CHARACTERISTICS

Symbol	Parameter		Value(MAX.)	Unit
V_{TM}	I_{TM} =60A t_p=380μs	T_j=25℃	1.8	V
V_{TO}	Threshold voltage	T_j=125℃	0.78	V
R_D	Dynamic resistance	T_j=125℃	27	mΩ
I_{DRM}	V_D=V_{DRM} V_R =V_{RRM}	T_j=25℃	20	μA
I_{RRM}		T_j=125℃	10	mA

THERMAL RESISTANCES

Symbol	Parameter	Value	Unit
$R_{th(j-c)}$	junction to case (AC)	0.71	℃/W
$R_{th(j-a)}$	junction to ambient (AC)	50	℃/W

ORDERING INFORMATION

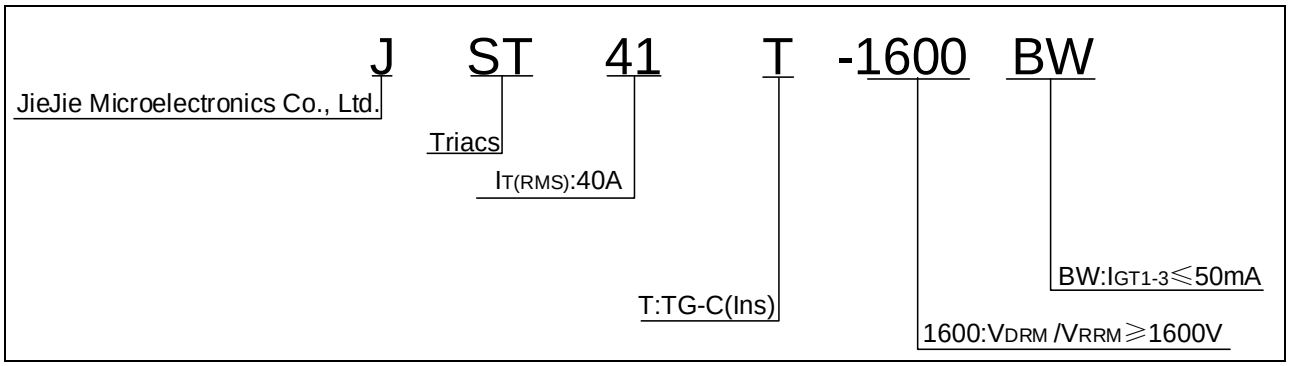

MARKING

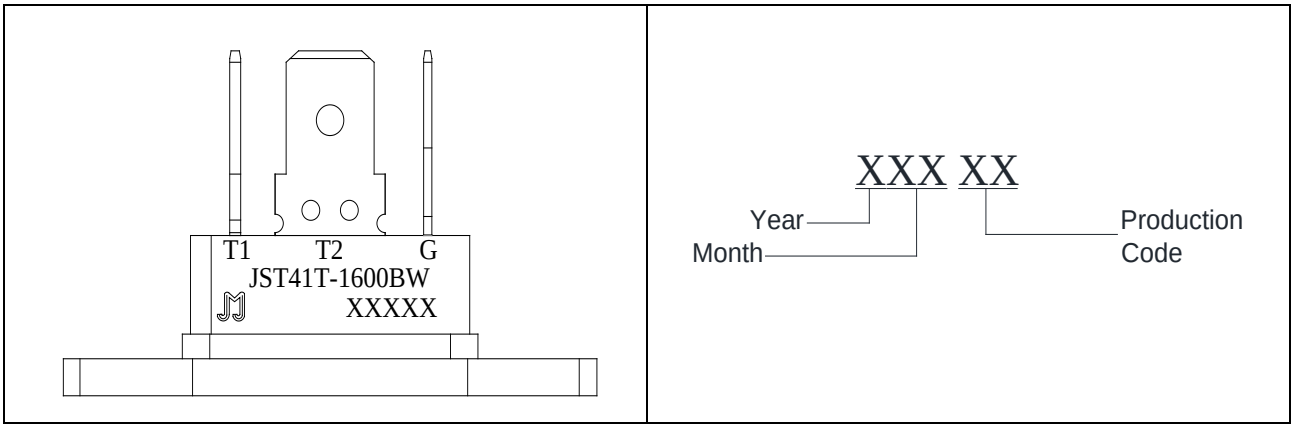

FIG.1: Maximum power dissipation versus RMS on-state current

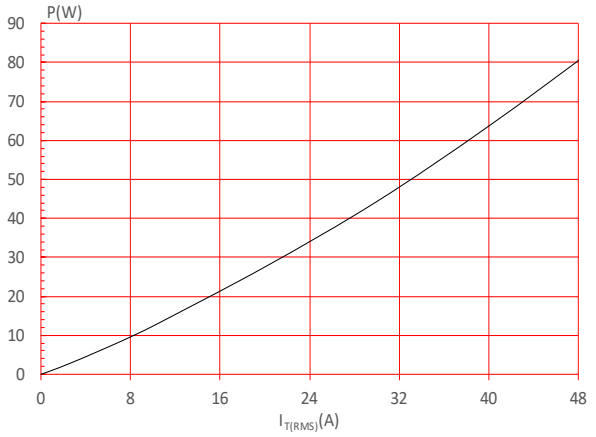

FIG.2: RMS on-state current versus case temperature

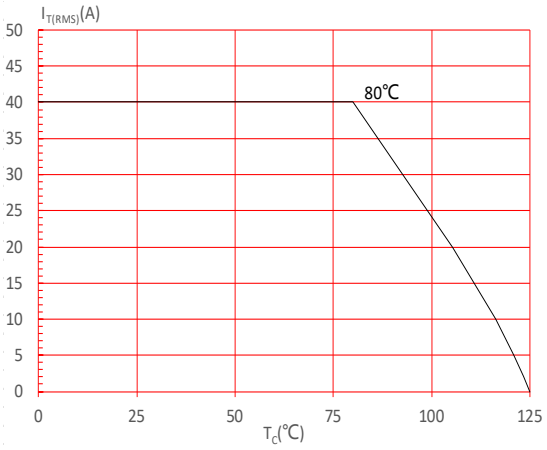

FIG.3: Surge peak on-state current versus number of cycles

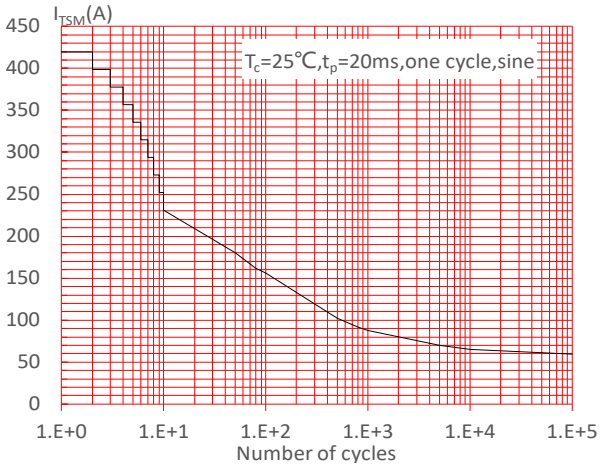

FIG.4: On-state characteristics

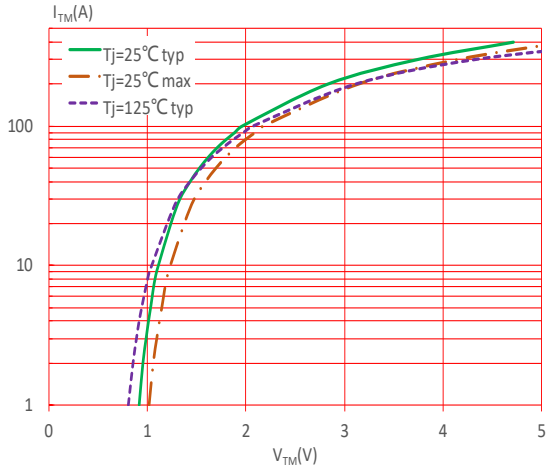

FIG.5: Non-repetitive surge peak on-state current for a sinusoidal pulse with width t_p<20ms, and corresponding value of I^2t (dI/dt<100A/μs)

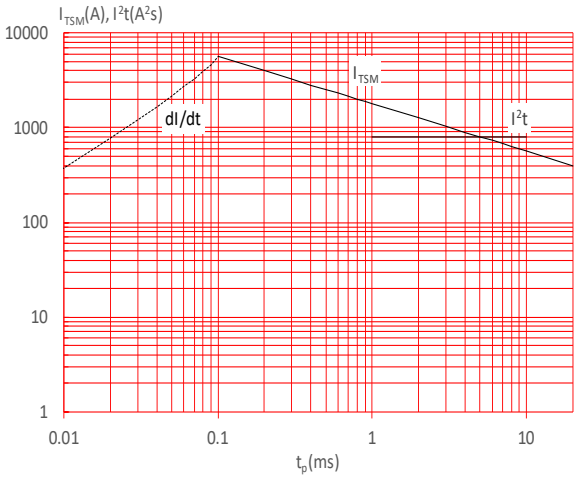

FIG.6: Relative variations of gate trigger current, holding current and latching current versus junction temperature

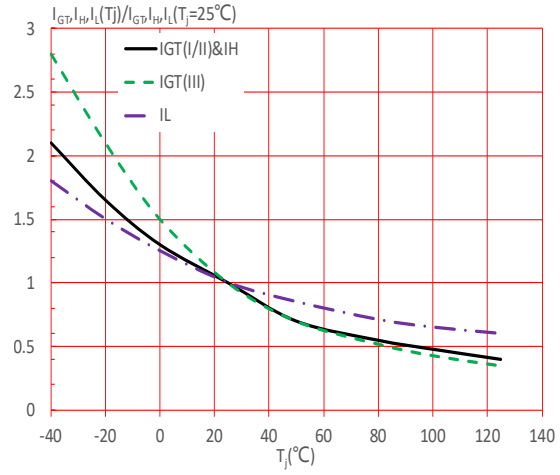

FIG.7：Test circuit for inductive and resistive loads to IEC-61000-4-5 standards

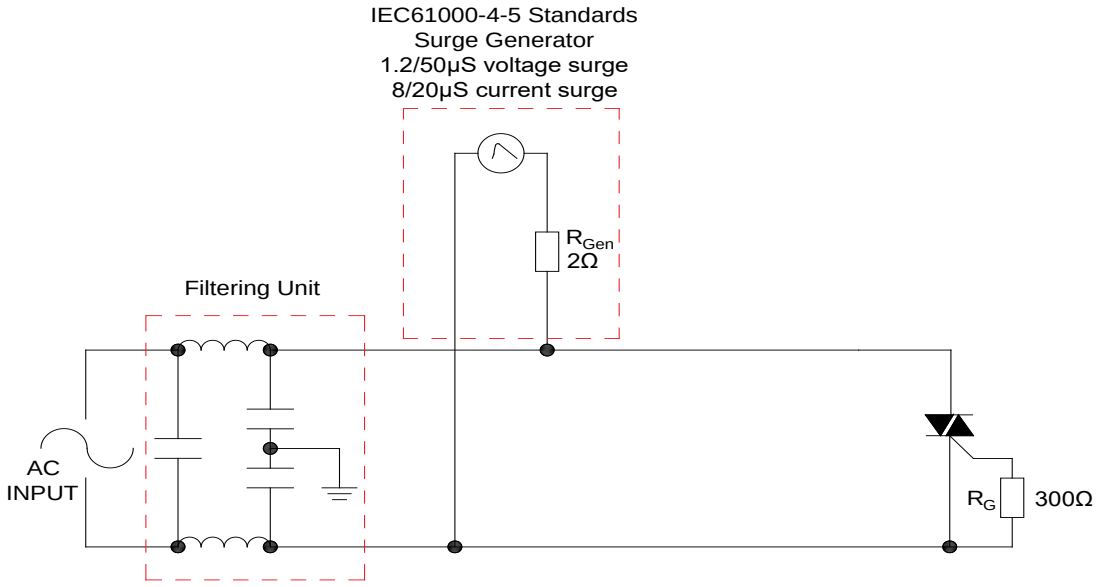

LEAD FORMING AND SOLDERING

Refer to the application note “Assembly Instructions for Thyristors in Through-hole Package” released by JieJie Microelectronics.

ORDERING INFORMATION

Order code	Voltage V_{DRM}/V_{RRM}(V)	IGT(mA)	Package	Base qty. (pcs)	Delivery mode
		Ⅰ-Ⅱ-Ⅲ			
JST41T-1600BW	1600	50	TG-C(Ins)	10	Tube

Document Revision History

Date	Revision	Changes
Apr.11, 2023	A.1.0	Last updated

PACKAGE MECHANICAL DATA

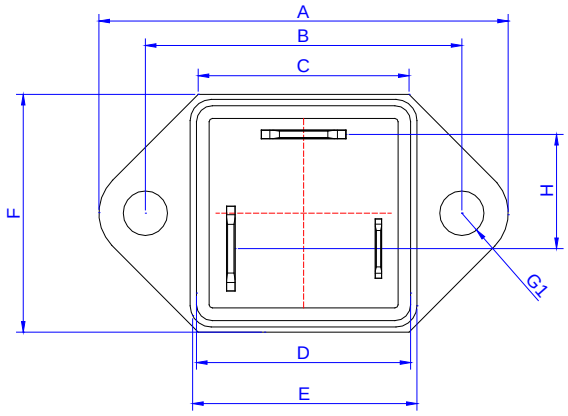

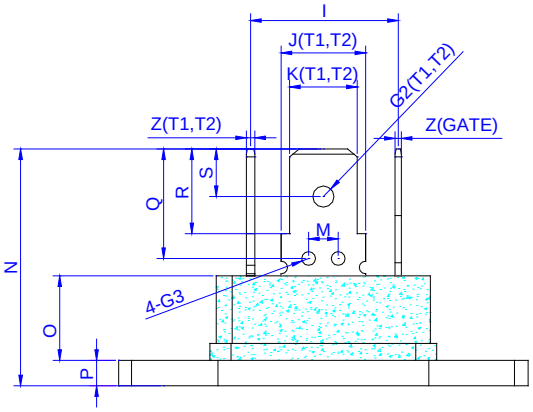

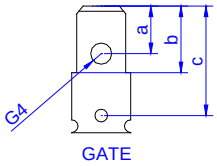

TG-C

Ref.	Dimensions					
	Millimeters			Inches		
	Min.	Typ.	Max.	Min.	Typ.	Max.
A			39.2			1.543
B	29.8	30.0	30.2	1.173	1.181	1.189
C			20.2			0.795
D			20.5			0.807
E			21.6			0.85
F			23			0.905
G1	Φ4.1	Φ4.2	Φ4.3	Φ0.161	Φ0.165	Φ0.169
H		10.3			0.406	
I		13.9			0.547	
J(T1,T2)		8			0.315	
K(T1,T2)		6.4			0.252	
M	2.7	3.0	3.3	0.106	0.118	0.130
N			22.8			0.898
O		8.2			0.323	
P		2.5			0.098	
Q	9.45	9.75	10.1	0.374	0.383	0.398
R	7.8	7.95	8.1	0.307	0.313	0.319
S	4.3	4.5	4.7	0.169	0.177	0.185
Z(T1,T2)	0.78	0.8	0.85	0.0307	0.0315	0.0335
G2(T1,T2)		Φ2	Φ2.2		Φ0.079	Φ0.087
G3	Φ1.1	Φ1.3	Φ1.5	Φ0.043	Φ0.051	Φ0.059
G4		Φ1.55	Φ1.75		Φ0.061	Φ0.069
a	2.95	3.15	3.35	0.116	0.124	0.132
b	6.2	6.35	6.5	0.244	0.25	0.256
c	9.35	9.75	10	0.368	0.384	0.393
Z(GATE)	0.58	0.6	0.65	0.0228	0.0236	0.0256
J(GATE)		5.6			0.221	
K(GATE)		4.65			0.183	

DELIVERY MODE

PACKAGE	OUTLINE	TUBE (PCS)	INNER BOX (PCS)	PER CARTON (PCS)
TG-C	TUBE	10	100	500

Information furnished in this document is believed to be accurate and reliable. However, Jiangsu JieJie Microelectronics Co., Ltd. assumes no responsibility for the consequences of use without consideration for such information nor use beyond it. Information mentioned in this document is subject to change without notice, apart from that when an agreement is signed, Jiangsu JieJie complies with the agreement.

Products and information provided in this document have no infringement of patents. Jiangsu JieJie assumes no responsibility for any infringement of other rights of third parties which may result from the use of such products and information. This document supersedes and replaces all information previously supplied.

is a registered trademark of Jiangsu JieJie Microelectronics Co., Ltd.

Copyright © 2023 Jiangsu JieJie Microelectronics Co., Ltd. All rights reserved.