JST139F-600F 16A TRIAC

Rev.A.1.1

DESCRIPTION:

The JST139F-600F triac is suitable for general purpose AC switching. It can be used as an ON/OFF function in applications such as heating regulation, induction motor starting circuits, for phase control operation in light dimmers, motor speed controllers. By using an external plastic package, JST139F-600F provides a rated insulation voltage of 2000 VRMS, complying with UL standards (File ref: E252906). Package TO-220F is RoHS compliant.

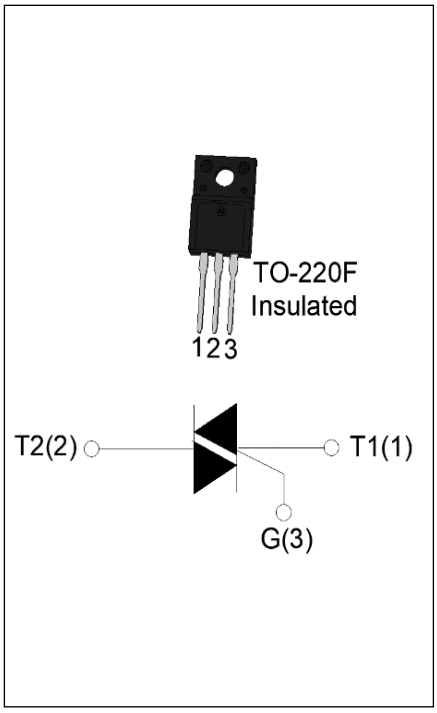

MAIN FEATURES

Symbol	Value	Unit
$I_{T(RMS)}$	16	A
V_{DRM} /V_{RRM}	600	V
$I_{GT\ I/II/III/IV}$	25/25/25/70	mA

ABSOLUTE MAXIMUM RATINGS

Parameter		Symbol	Value	Unit
Storage junction temperature range		T_{stg}	-40-150	℃
Operating junction temperature range		T_j	-40-125	℃
Repetitive peak off-state voltage (T_j=25℃)		V_{DRM}	600	V
Repetitive peak reverse voltage (T_j=25℃)		V_{RRM}	600	V
RMS on-state current (T_C≤70℃)		$I_{T(RMS)}$	16	A
Non repetitive surge peak on-state current (full cycle , t_p=20ms , T_j=25℃)		I_{TSM}	140	A
Non repetitive surge peak on-state current (full cycle , t_p=16.6ms , T_j=25℃)			154	
I^2t value for fusing (t_p=10ms , T_j=25℃)		I^2t	98	A^2s
Critical rate of rise of on-state current (I_G=2×I_{GT} , f=100Hz , T_j=125℃)	I - II	dI/dt	100	A/μs
	III-IV		70	
Peak gate current (t_p=20μs , T_j=125℃)		I_{GM}	4	A
Average gate power dissipation (T_j=125℃)		$P_{G(AV)}$	0.5	W
Peak gate power		P_{GM}	10	W

Peak pulse voltage (T_j=25℃; non-repetitive,off-state;FIG.7)	V_{pp}	1	kV

ELECTRICAL CHARACTERISTICS (T_j=25℃ unless otherwise specified)

Symbol	Test Condition	Quadrant	Value		Unit
I_{GT}	V_D=12V R_L=33Ω	Ⅰ-Ⅱ-Ⅲ	MAX.	25	mA
		Ⅳ		70	
V_{GT}		ALL	MAX.	1	V
V_{GD}	V_D=V_{DRM} T_j=125℃ R_L=3.3kΩ	ALL	MIN.	0.2	V
I_L	I_G=1.2I_{GT}	Ⅰ-Ⅲ-Ⅳ	MAX.	50	mA
		Ⅱ		100	
I_H	I_T=500mA		MAX.	40	mA
dV/dt	V_D=400V Gate Open T_j=125℃		MIN.	250	V/μs
(dV/dt)c	(dI/dt)c=7.2A/ms, T_j=110℃		MIN.	10	V/μs
t_{on}	I_G=80mA I_A=400mA I_R=40mA T_j=25℃		TYP.	10	μs
t_{off}				70	

STATIC CHARACTERISTICS

Symbol	Parameter		Value(MAX.)	Unit
V_{TM}	I_{TM}=20A t_p=380μs	T_j=25℃	1.5	V
V_{TO}	Threshold voltage	T_j=125℃	0.75	V
R_D	Dynamic resistance	T_j=125℃	27	mΩ
I_{DRM}	V_D=V_{DRM} V_R=V_{RRM}	T_j=25℃	5	μA
I_{RRM}		T_j=125℃	0.4	mA

THERMAL RESISTANCES

Symbol	Parameter	Value	Unit
$R_{th(j-c)}$	junction to case (AC)	2.4	℃/W
$R_{th(j-a)}$	junction to ambient (AC)	60	℃/W

ORDERING INFORMATION

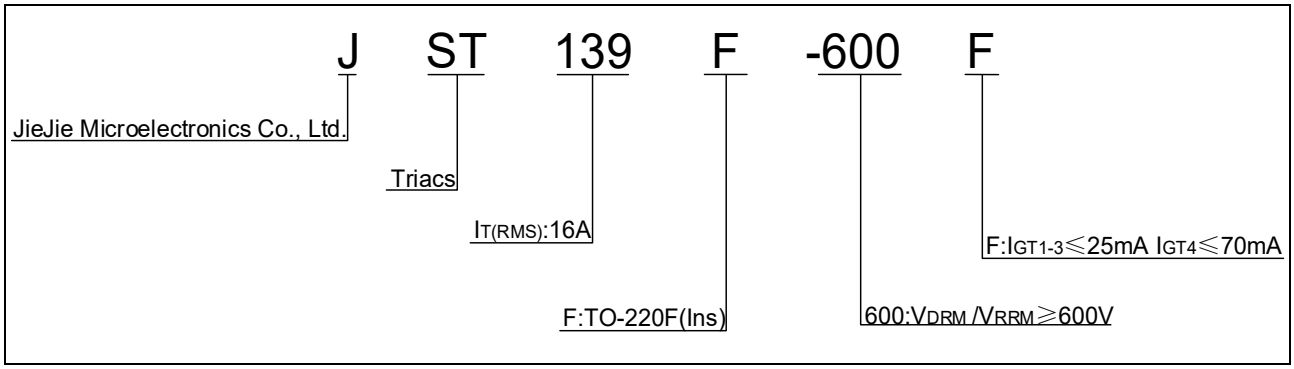

MARKING

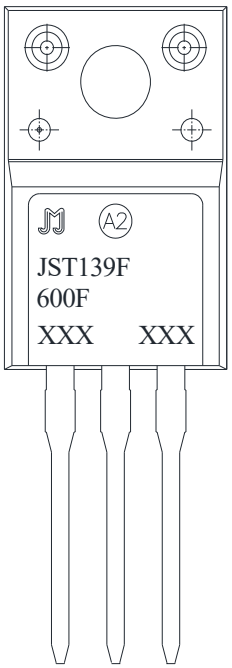

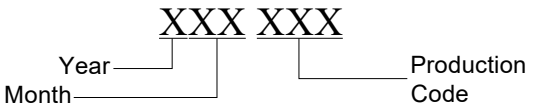

FIG.1: Maximum power dissipation versus RMS on-state current

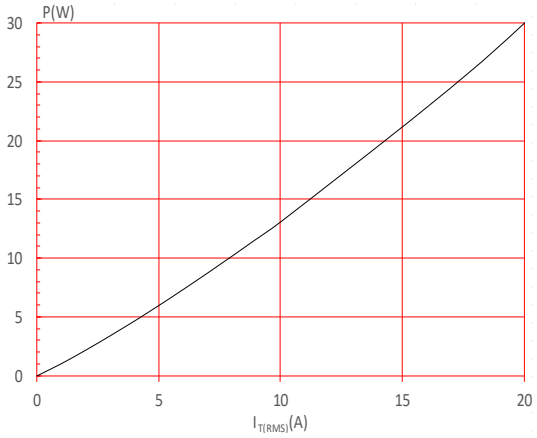

FIG.2: RMS on-state current versus case temperature

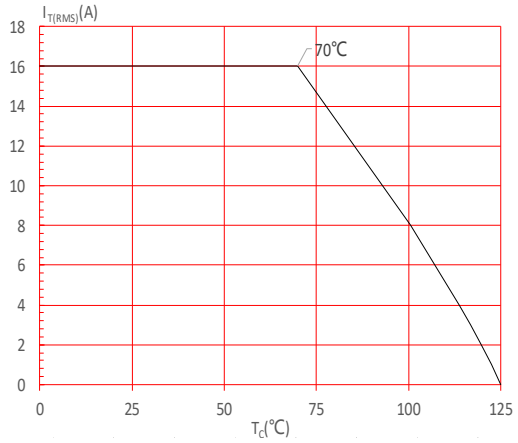

FIG.3: Surge peak on-state current versus number of cycles

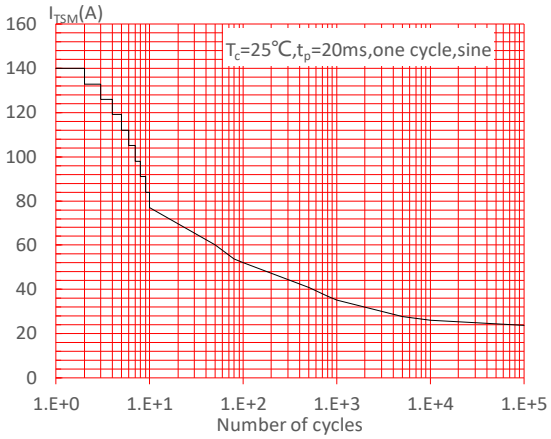

FIG.4: On-state characteristics

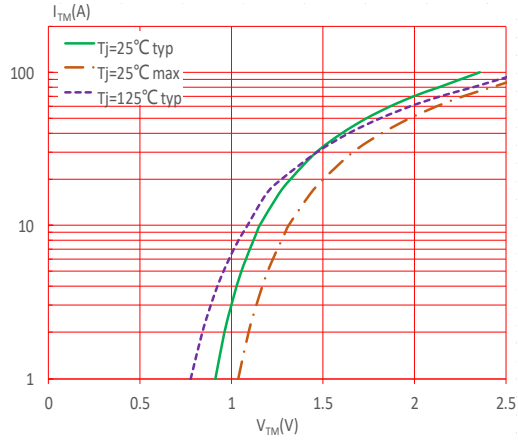

FIG.5: Non-repetitive surge peak on-state current for a sinusoidal pulse with width t_p <20ms, and corresponding value of I^2t

(Ⅰ-Ⅱ: dI/dt<100A/μs;Ⅲ-Ⅳ: dI/dt<70A/μs)

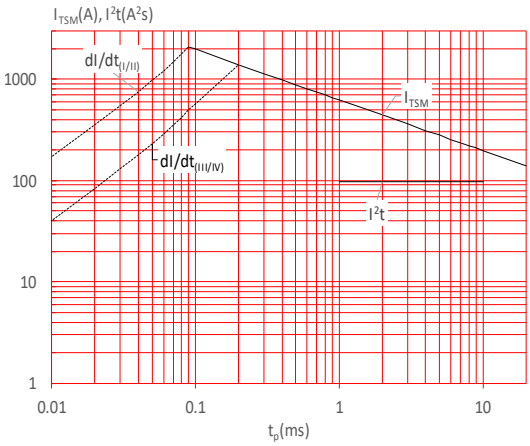

FIG.6: Relative variations of gate trigger current, holding current and latching current versus junction temperature

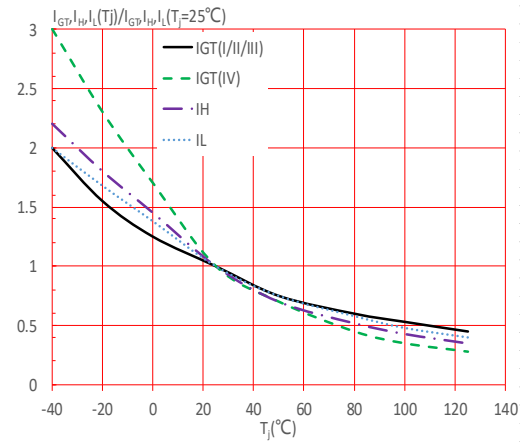

FIG.7：Test circuit for inductive and resistive loads to IEC-61000-4-5 standards

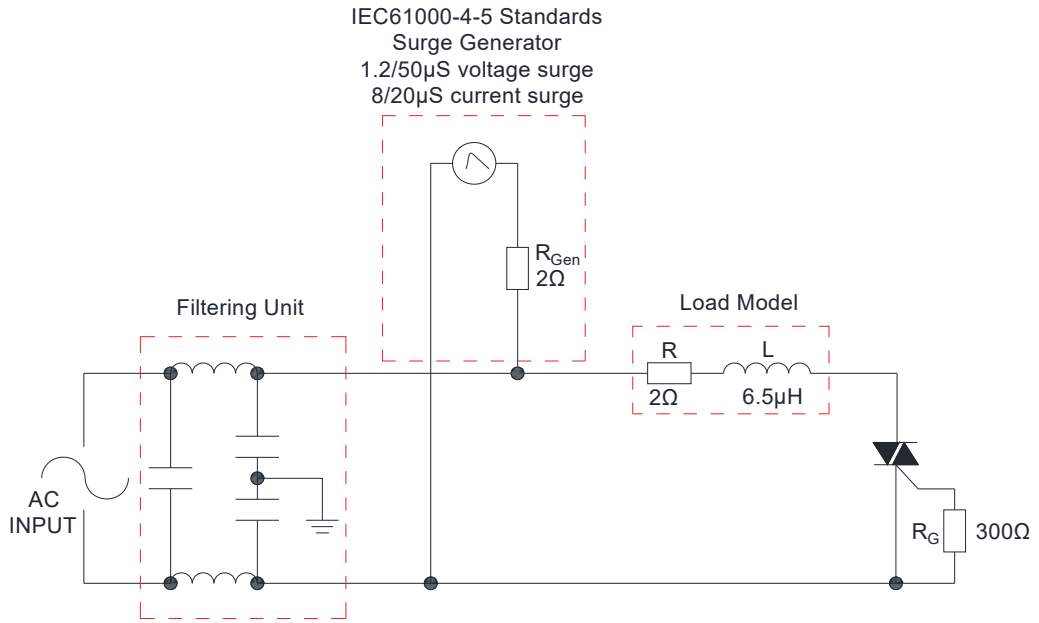

LEAD FORMING AND SOLDERING

Refer to the application note “Assembly Instructions for Thyristors in Through-hole Package” released by JieJie Microelectronics.

ORDERING INFORMATION

Order code	Voltage V_{DRM}/V_{RRM} (V)	IGT(mA)		Package	Base qty. (pcs)	Delivery mode
		Ⅰ-Ⅱ-Ⅲ	Ⅳ			
JST139F-600F	600	25	70	TO-220F(Ins)	50	Tube

Document Revision History

Date	Revision	Changes
Apr.14, 2023	A.1.0	Last updated
Oct.15, 2025	A.1.1	Revise PACKAGE MECHANICAL DATA

PACKAGE MECHANICAL DATA

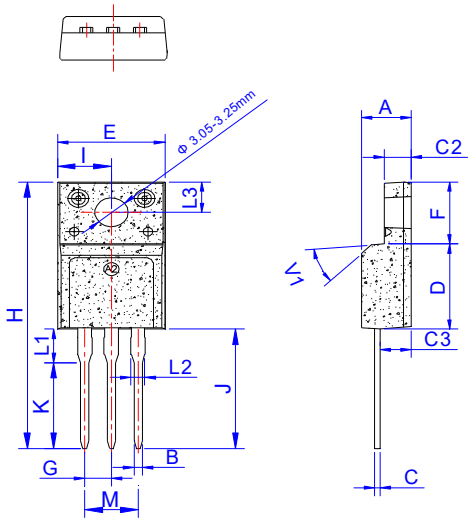

Ref.	Dimensions					
	Millimeters			Inches		
	Min.	Typ.	Max.	Min.	Typ.	Max.
A	4.50		4.90	0.177		0.193
B	0.74	0.80	0.83	0.029	0.031	0.033
C	0.47		0.65	0.019		0.026
C2	2.45		2.75	0.096		0.108
C3	2.60		3.00	0.102		0.118
D	8.80		9.30	0.346		0.366
E	9.80		10.4	0.386		0.410
F	6.40		6.80	0.252		0.268
G	2.40		2.70	0.094		0.106
H	28.0		29.8	1.102		1.173
I	4.80		5.20	0.189		0.205
J	12.60		13.00	0.496		0.512
K	9.60		10.00	0.378		0.394
L1	3.20		3.80	0.126		0.150
L2	1.14		1.70	0.045		0.067
L3	3.20		3.60	0.126		0.142
M	4.80		5.20	0.189		0.205
V1		45°			45°	

DELIVERY MODE

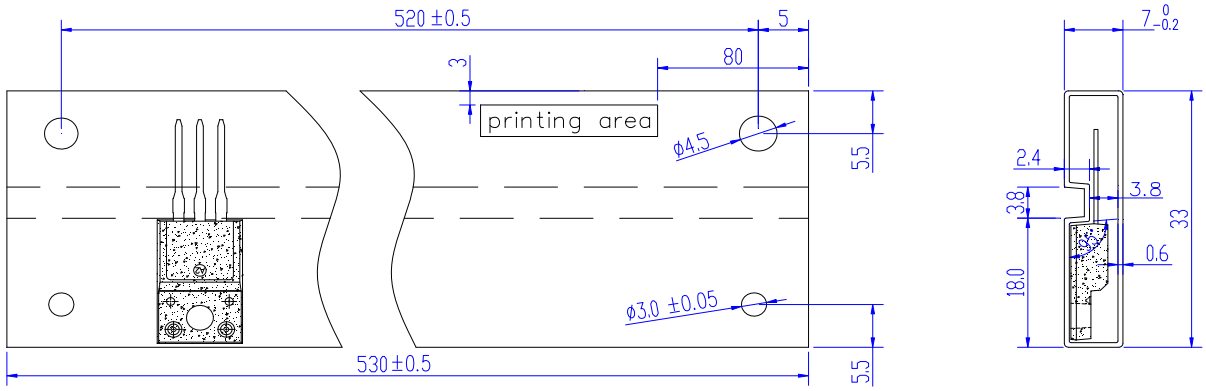

PACKAGE	OUTLINE	TUBE (PCS)	INNER BOX (PCS)	PER CARTON
TO-220F	TUBE	50	1,000	5,000

Information furnished in this document is believed to be accurate and reliable. However, Jiangsu JieJie Microelectronics Co., Ltd assumes no responsibility for the consequences of use without consideration for such information nor use beyond it. Information mentioned in this document is subject to change without notice, apart from that when an agreement is signed, Jiangsu JieJie complies with the agreement.
Products and information provided in this document have no infringement of patents. Jiangsu JieJie assumes no responsibility for any infringement of other rights of third parties which may result from the use of such products and information. This document supersedes and replaces all information previously supplied.
is a registered trademark of Jiangsu JieJie Microelectronics Co., Ltd.
Copyright © 2025 Jiangsu JieJie Microelectronics Co., Ltd. All rights reserved.